BODY, ROOF - Z26S4D92AN/AH/BN/BH (C750887)

2026 RZR - RZR PRO S4 ULTIMATE (R01) - Z26S4D92AN/AH/BN/BH

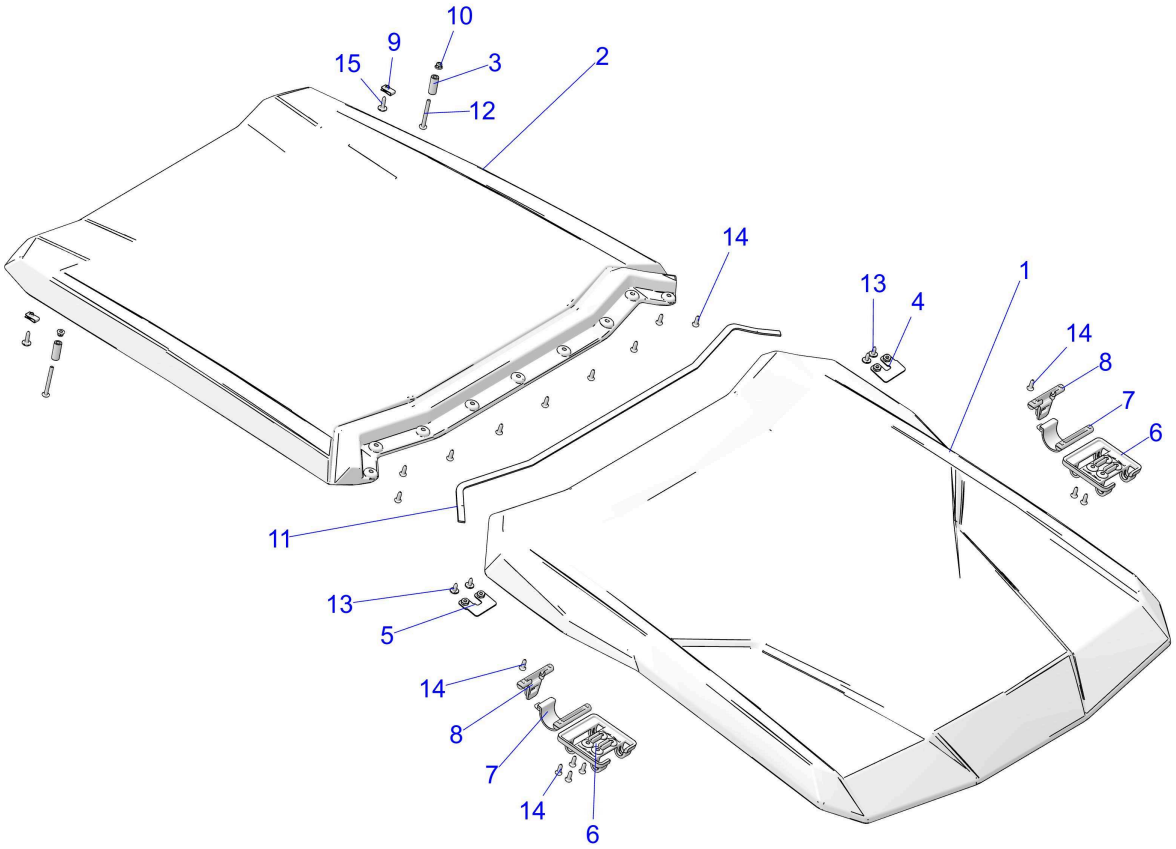

© 2025 Polaris Industries Inc.

C750887

Reference #	*Part#*	*Description*	*Quantity*
	2883946	K-ROOF,POLY,MP,RZV [INCLS ALL]	1
	2207884	HDWR-ROOF,POLY,MP,RZV [INCLS 3,4,5,10,11,12,13,14,15]	1
1	5455762	PANEL-ROOF,POLY,RZV	1
2	5455858	PANEL-ROOF,POLY,RR,RZV	1
3	5143403-329	SPACER-ROOF DOGHOUSE,BLK	2
4	5269413-329	BRKT-ROOF DOGHOUSE,LH,BLK	1
5	5269414-329	BRKT-ROOF DOGHOUSE,RH,BLK	1
6	5455622	CLAMP-BASE,ROOF,RZV	2
7	5455623	CLAMP-HOOP,ROOF,RZV	2
8	5455624	CLAMP-LATCH,ROOF,RZV	2

9	7081305	CLIP-U SPEED NUT	2
10	7547453	NUT-HXFL-M6X1.0 8 ZB3 NYL	2
11	5814864	TAPE-FOAM,PNL SEAL,MP PLY ROOF	1
12	7518882	SCR-M6X1X60,TX TR,BLK	2
13	7518936	SCR-M6X1X16 TR/TX-M	4
14	7519045	SCR-TX TRUSS-#14X3/4, HI/LO ZBK	17
15	7519650	SCR-TXTH-M6X1.0X25 ZFB	2

Copyright 1996-2026 Polaris Industries U.S.A All rights reserved.